Parts Checklist:

BOX 1

- ❑ Rock-Link decal 13287 (2)
- ❑ Iron Rock Off Road logo decal 10001 (2)
- ❑ Ironrockoffroad.com decal (1)
- ❑ Front sway bar link 10.75" center to center 92146 (2)
- ❑ Subframe center section 91154 (1)
- ❑ Subframe left outer 91147 (1)
- ❑ Subframe right outer 91151 (1)
- ❑ XJ Brake line set 4-8" 10207 (1)
- ❑ IRO Boomerang Shackle 91110 (2)
- ❑ T-Case drop spacer 99003 (2)
- ❑ XJ/ZJ double shear track bar bracket 91015 (1)
- ❑ Double adjustable track bar 92305 (1)
- ❑ Double adjustable track bar male end 92297 (1)
- ❑ Double adjuster, track bar 91235 (1)

#277 – XJ Double Adjustable Track Bar Hardware (1)

- ❑ Track bar bushing half 80014 (4)
- ❑ 12mm track bar bushing sleeve 92035 (1)
- ❑ 7/16" I.D. track bar bushing sleeve 92036 (1)
- ❑ Track bar clamp 92303 (2)
- ❑ M12-1.75 x 80 hex bolt (2)
- ❑ M12-1.75 hex nut (2)
- ❑ 7/16" x 2-1/2" hex bolt, gr8 (1)
- ❑ 7/16" Track Bar Flag Nut 91230 (1)
- ❑ 7/16" USS flat washer (5)

BOX 2

- ❑ Front coil spring 96015 (2)
- ❑ U-Bolt set - specific to customer vehicle:
  - ❑ Optional: for 8.8 91093 (4 U-bolts)
    - ❑ 9/16-20 high nut (8)
    - ❑ 9/16 hardened flat washer (8)
  - ❑ Optional: for Dana 35/44 91094 (4 U-bolts)
    - ❑ 1/2-20 high nut (8)
    - ❑ 1/2 hardened flat washer (8)
  - ❑ Optional: for Chrysler 8.25 91095 (4 U-bolts)
    - ❑ 1/2-20 high nut (8)
    - ❑ 1/2 hardened fat washer (8)

#10 - Front Sway Bar Link Hardware (1)

- ❑ 3/4" hourglass bushing 94025-BK-01 (4)
- ❑ 12mm sway bar bolt sleeve 92038 (4)
- ❑ M12 x 70 cl10.9 hex bolt (2)
- ❑ M12 cl10.9 hex nut (2)
- ❑ 1/2 x 1 1/2" gr8 hex bolt (2)
- ❑ 1/2 gr8 lock washer (2)
- ❑ 1/2 gr8 hex nut (2)
- ❑ Sway bar link u-bracket 99000 (2)

#127 - 2 5/8" 6 Bolt IRO Flex End Hardware (2)

- ❑ Inner race 91118 (2)
- ❑ Thrust washer 91119 (2)
- ❑ Ball 91117 (1)
- ❑ 10-32 x 1-3/4" Socket Head Cap Screw (6)
- ❑ 10-32 Nylock Nut (6)
- ❑ 90 Degree ¼"-28 Grease Zerk Fitting (1)

#72 - Leaf Spring Bushing Hardware (1)

- ❑ Main eye bushing M20774 (4)
- ❑ Shackle bushing M20775(4)
- ❑ Main eye bushing sleeve 91071 (2)
- ❑ Shackle bushing sleeve 91070 (2)

#134 - IRO Shackle Hardware (1)

- ❑ IRO shackle bushing M02247BK-01 (4)
- ❑ IRO bushing sleeve 91100 (2)
- ❑ ¼" Straight grease zerk (2)

#168 - 2-3/8" Flex End Hardware (1)

- ❑ End cap 91138 (2)
- ❑ Inner race 91139 (2)
- ❑ Flex end ball 91140 (1)
- ❑ 8-32 x 1-1/2" socket head cap screw (8)
- ❑ 90° ¼"-28 grease zerk fitting (1)
- ❑ Straight 1/4-28 grease zerk fitting (1)

#181 - 3-Link Control Arm Clamping Hardware (1)

- ❑ 1/4"-28 x 1-1/8" socket head cap screw (4)
- ❑ 3/8-16 x 1 1/4" hex bolt grade 8 (1)
- ❑ 1/4"-28 hex nut, grade 8 (4)
- ❑ 3/8-16 nylock flange nut (1)
- ❑ 3/8 Mil Spec Hardened washer (1)

#182 - XJ 3-Link Long Arm Subframe Hardware (1)

- ❑ M14 x 2.0 x 90 hex bolt cl10.9 (1)
- ❑ M14 x 2.0 x 100 hex bolt cl10.9 (2)
- ❑ M14 x 2.0 x 110 hex bolt cl10.9 (2)
- ❑ M10 x 1.5 x 30 flange bolt class 10.9 (4)
- ❑ M10 x 80 cl10.9 hex bolt (1)
- ❑ M10 x 25 carriage bolt (4)
- ❑ M10 X 50 carriage bolt (4)
- ❑ M10-1.5 cl10.9 hex nut (4)
- ❑ M10-1.5 cl10.9 nylock flange nut (1)
- ❑ 7/16-14 X 1-1/4 gr8 hex bolt (2)
- ❑ M14 Nylock flange nut cl10.9 (4)
- ❑ 3/8 USS flat washer (12)
- ❑ 9/16 F436 hardened washer (5)

#274 – XJ Rear Shock Spacer Hardware (1)

- ❑ Spacer 99170 (2)

Shocks

- ❑ ***Trail Tamer HD Hydro***
  - ❑ Front shock 79002 (2)
  - ❑ Rear shock 79004 (2)
- ❑ ***Doetsch Upgrade (Optional)***
  - ❑ Front shock DT 8386 (2)
  - ❑ Rear shock DT 8299 (2)

  #15 - Shock Hardware (1)
    - ❑ 2.5" long front barpin (2)
    - ❑ 2.75" long rear barpin (2)
- ❑ ***Bilstein Upgrade (Optional)***
  - ❑ Front shock 33-230375 (2)
  - ❑ Rear shock 33-186559 (2)

  #15 – Shock Hardware (1)
    - ❑ Front barpin 2.5" (2)
    - ❑ Rear barpin 2.75" (2)

BOX 3* (42x15x7)

- ❑ XJ Long LCA Left 85107 (1)
- ❑ XJ Long LCA Right 85108 (1)
- ❑ XJ 3-Link Front UCA 91205 (1)
- ❑ Angled Long Arm Male End 91109 (2)
- ❑ 2 3/8 UCA Male End 91191 (1)

UNBOXED

- ❑ XJ 5.5" leaf spring (90150) (2)

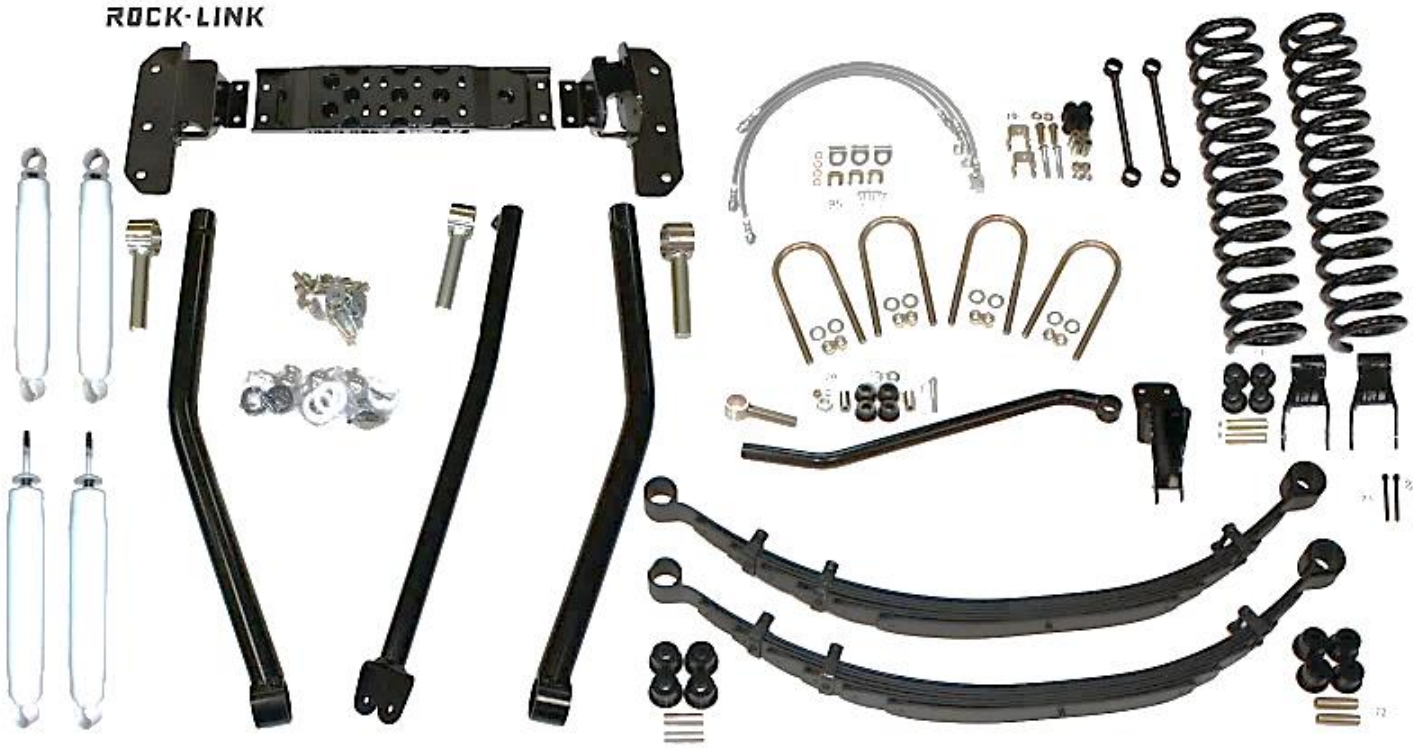

IRON ROCK OFF ROAD

ROCK-LINK

Installation Instructions:

Safety Warning: ***Important! Read before installation. ***

Installing a suspension lift kit raises the center of gravity of the vehicle. This increases the possibility of a rollover accident. Avoid sudden maneuvers at high speed and avoid all situations where a side rollover may occur. In addition, larger tires decrease braking performance, please drive accordingly. We recommend a tire and wheel combination that make the vehicle's track width wider (wheels with less backspacing than OEM). This will lower the center of gravity and add stability. We also recommend that this system be installed by a qualified professional. Knowledge of suspension component function is necessary for safe installation and post installation inspections. Be sure to re-torque all suspension components after the first 100 miles of use, and frequently inspect all safety critical suspension components.

Before you begin:

- ❑ Read all safety warnings.
- ❑ Read and understand installation instructions.
- ❑ *2000 and 2001 models with automatic transmissions will require old style transmission mount such as Anchor 2625*
- ❑ Check all steering and suspension components for wear and replace as needed.
- ❑ Contact Iron Rock Off Road with any questions before, during, or after installation.
- ❑ **Ensure that all parts are present and in good condition using the included shipping checklist.**
- ❑ Be sure you have the following tools and supplies:
  - ❑ Floor jack and jack stands
  - ❑ Basic hand tools
  - ❑ Multi-purpose grease (all poly bushings should be greased before installation)
  - ❑ Metal cutting tools such as a 4 ½" angle grinder with thin metal cutting wheel, and a sandpaper flap wheel for an attractive finish. Possibly a sawzall with metal cutting blades.
  - ❑ Paint and primer (for uniframe - black or your choice of color).
  - ❑ Anti-seize compound
  - ❑ Hand Drill
  - ❑ 23/64" drill bit (.359" diameter)
  - ❑ 7/16-14 Taper Hand Tap
  - ❑ Angle finder
  - ❑ String level or laser level

Prepare the parts for installation:

1. Locate **HK #15** and the rear shocks.
2. Grease and install the barpins into the top side of the rear shocks. It helps to use a press, or clamp the barpin vertically in a bench vise, and lower the shock onto the barpin while rotating the shock back and forth. Be sure to thoroughly grease the barpin and the shock bushing. If needed, you can grind or file the corners of the barpin to provide a lead in surface. Remove any sharp edges to prevent damage to the shock bushing.
3. Install the front barpins by repeating the procedure in step 2.
4. Locate track bar, track bar male threaded end, track bar bracket, double adjuster, and **HK #277**. Install clamps onto the double adjuster.
5. Apply anti-seize to all the threads then thread the track bar and male end into the double adjuster. Ensure the ends are equally threaded into the double adjuster then adjust the length to 33-5/8" center to center as a starting point.
6. Apply multi-purpose grease to both poly bushings and both inner bushing sleeves. Install bushings then sleeves into the track bar. The sleeve with the larger hole goes into frame side. (Longer end)

7.
8. Locate the front sway bar links, front sway bar link u-brackets, and **HK #10**. (If you purchased JKS Sway Bar Disconnect system, refer to JKS instructions.
9. Grease and install the hourglass bushings.
10. Grease and install the sway bar link inner sleeves.
11. Leave the rest of the hardware in the bag for future use.
12. Locate the rear leaf spring shackle kit. If equipped with poly bushings, grease and install the poly bushings and inner bushing sleeves.
13. Locate the lower control arms (larger), male ends (larger, angled), **HK #127** and **HK #181**.
14. Assemble flex ends into male end. Use **HK #127** and attached instructions (2-5/8").
15. Locate the upper control arm (smaller), male end (smaller, straight), and **HK #168**.
16. Assemble flex end into upper control arm. Use **HK #168** and attached instructions (2-3/8").
17. Apply a light coat of anti-seize compound to the threads, thread male ends into control arms.
18. Adjust control arm lengths per the chart.
19. Install clamping bolts. Do not tighten at this time

Control Arm Length (Starting Lengths - Center to Center)		
Lift Height	**LCA**	**UCA**
5.5	36 1/2	37 1/4
6.5	36 5/8	37 3/8

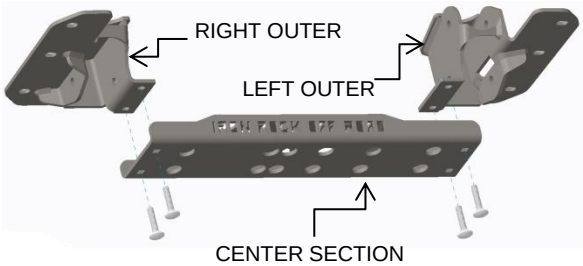

Control arm mounting subframe:

20. Lift front and rear of vehicle and support with jack stands under the uniframe. Leave room to cut off the stock lower control arm mounts.
21. Remove the four transmission mount nuts from the transmission.
22. Raise transfer case slightly and support with a jack stand.
23. Remove the factory transmission mounting crossmember.
24. Using a stud puller, remove the two crossmember mounting studs. If you do not have a stud puller, you can install 2 nuts and tighten one against the other then remove using a box end wrench on the inner nut.
25. Drill and tap the third mounting hole on each side (the next hole directly forward from the two crossmember mounting holes) using the 23/64 (.359" diameter) drill bit and 7/16-14 hand tap. Use plenty of oil during drilling and tapping and keep the drill bit and tap as straight as possible.
26. **Install upper control arm into left subframe outer.** Make sure the threaded male end is installed in the subframe using the M14 x 90 bolt and the arm is oriented with the bend hanging down to clear the floor. Bolt faces from center out so it can be removed later if needed.

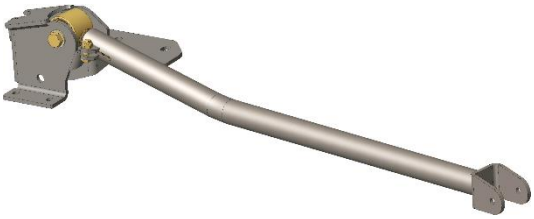

27. Install subframe outer in vehicle using M10 flange and 7/16 bolts, and washers from **HK #182**.
28. Install right subframe outer using the same hardware.
29. *2000 and 2001 w/auto trans only* Remove trans isolator mount. Grind off locating pin from mounting plate. Install older style trans mount. Torque to 78 ft-lbs.
30. Using M10 x 25 carriage bolts, 3/8" washers, and M10 nuts, loosely assemble the subframe center section to the outers (center section underneath the outers). *****The text side of the center section face forward when installed in the vehicle. *****
31. Torque 7/16 bolts to 65 ft-lbs. Torque M10 bolts to 50 ft-lbs.
32. Torque subframe center section bolts to 45 ft-lbs.
33. Torque upper control arm bolt at uniframe to 135 ft-lbs.

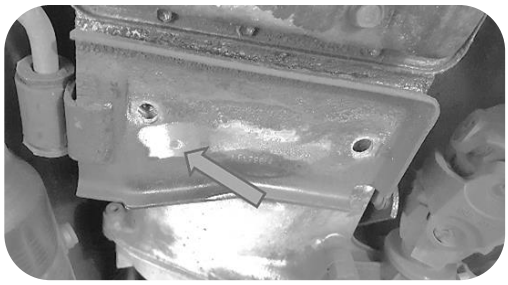

34. Lower the transfer case on to the subframe.
35. Install the four transmission mount nuts and torque to 15 ft-lbs.

Front Suspension:

36. Lift front of vehicle and support with tall jack stands under the unibody frame or long arm subframe.
37. Ensure the vehicle is safely supported.
38. Place a floor jack under the front axle for support, do not lift vehicle.
39. Remove the front shocks.
40. Remove the track bar and mounting bracket at unibody. No need to separate track bar from bracket.
41. Remove front sway bar links.
42. Remove front brake hoses and install supplied extended length, braided stainless steel brake hoses. Be sure to route brake hoses away from any moving parts or pinch points. Route hoses so they will not rub against any other parts which could wear a hole in the brake line. Be sure brake lines are securely fastened to the unibody at the top side. *Tip: To clear larger tires, move the uniframe mount forward about 2 inches.

43. Remove upper and lower factory control arms.
44. Disconnect the driveshaft on the axle side and tape the u-joint so the caps do not fall off. Tie the driveshaft out of the way (use tape, zip tie, mechanic's wire, etc.…) for easier access to the lower control arm mount.
45. Tie the upper control arm out of the way.
46. Cut off factory lower control arm mounts from the uniframe on the driver's and passenger's side.
47. ***Tip: Our favorite tool for this is a 4-1/2" angle grinder with a thin cutting wheel. Remove in pieces for ease of access. ***
48. Remove anything on the driver's side that extends inward (toward the transmission) beyond the uniframe. Do not remove any of the uniframe; just make one continuous edge from front to rear.
49. Clean up any burrs or sharp edges and grind smooth for an attractive appearance.
50. Clean, prime, and paint any exposed metal.
51. Connect the upper control arm to the axle using M10 x 80 bolt with washer and nylock flange nut. Do not tighten at this time.
52. Install lower control arms (axle end first) with threaded adjusting end at the uniframe, and bends facing inward to clear the tires, thread clamping bolts facing down. Use provided M14 x 100 bolts (at axle), M14 x 110 bolts (at subframe), 9/16" washers, and nylock nuts. Do not tighten at this time.
53. Install new springs in vehicle being careful to align the springs to the spring buckets on the axle.
54. Using a floor jack lift the front axle just enough to apply some load to the coil springs, do not lift vehicle.
55. Locate front track bar, track bar mounting bracket, and **HK #277**.

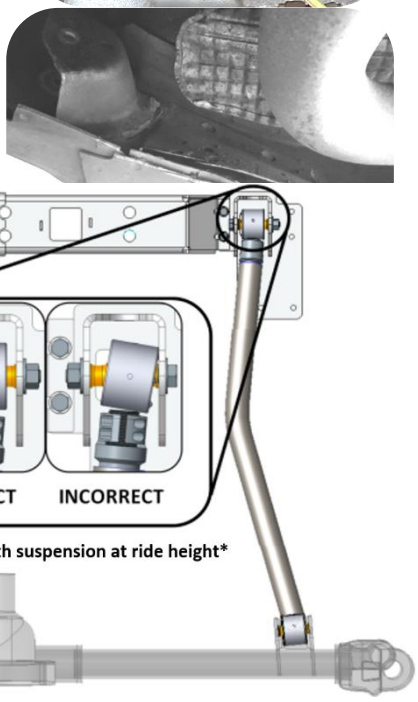

56. Install the track bar bracket onto the unibody with the factory bolts. Loosely attach the bracket with the upper two bolts, then align the lower bolt mounting holes. Install the lower mounting bolts and torque all track bar bracket hardware to 92 ft-lbs.
    ***NOTE:** If the unibody is rusty, the seam behind the factory bracket may have swelled making installation of the lower mounting bolts difficult. Using a ratchet strap to pull the bracket to align the holes or smoothing the seam with a hammer is recommended.
57. Install the track bar and torque bolt at axle to 74 ft-lbs., and bolt at bracket to 80 ft-lbs. If necessary, use a floor jack and/or the steering wheel to help align the track bar.
58. Raise vehicle slightly and reposition jack stands under the front axle.
59. Re-install coil spring retainer clamps.
60. Install new front shocks using original barpin bolts. Tighten upper stud mount nuts just enough to slightly compress the bushings. Over compressing these bushings will result in damage to the bushings and premature bushing failure.
61. Locate front sway bar links (10.75" center to center), two u-brackets, and the remainder of **HK #10**.
62. Install sway bar link u-brackets to the sway bar using 1/2 x 1-1/2" grade 8 hex bolts, lock washers, and nuts. Brackets mount to the bottom of the sway bar with the bolt facing up and the lock washer and nut on top of the sway bar. Rotate the bracket so it is offset away from the center of the vehicle. Align brackets, torque bolts to 80 ft-lbs.
63. Install sway bar links driver's side first using provided M12 x 70mm class 10.9 hex bolt and nut through the u-bracket with the nuts toward the outside of the vehicle, and the original bolt, nut, and washer at the axle. Tighten all bolts to 78 ft-lbs.
64. Ensure that vehicle is safely supported.
65. Any remaining loose bolts will be torqued after rear suspension installation and with full vehicle weight on the suspension.

Rear Suspension:

66. Lift rear of vehicle and support with tall jack stands under the unibody frame.
    ****TIP:** break lug nuts loose before lifting vehicle.
67. Ensure that the vehicle is safely supported.
68. Remove rear tires.
69. Place a floor jack under the center of rear axle for support (do not lift vehicle).
70. Remove rear shocks.
71. Remove and temporarily plug rear brake line.
72. Remove leaf springs and shackles from the vehicle.
73. Apply anti-seize to bolts and install new leaf spring shackles. IRO text facing rearward. Do not tighten bolts at this time.
74. Apply anti-seize to bolts and install new leaf springs into the unibody. Short end of leaf spring forward. Use upper hole in shackle.

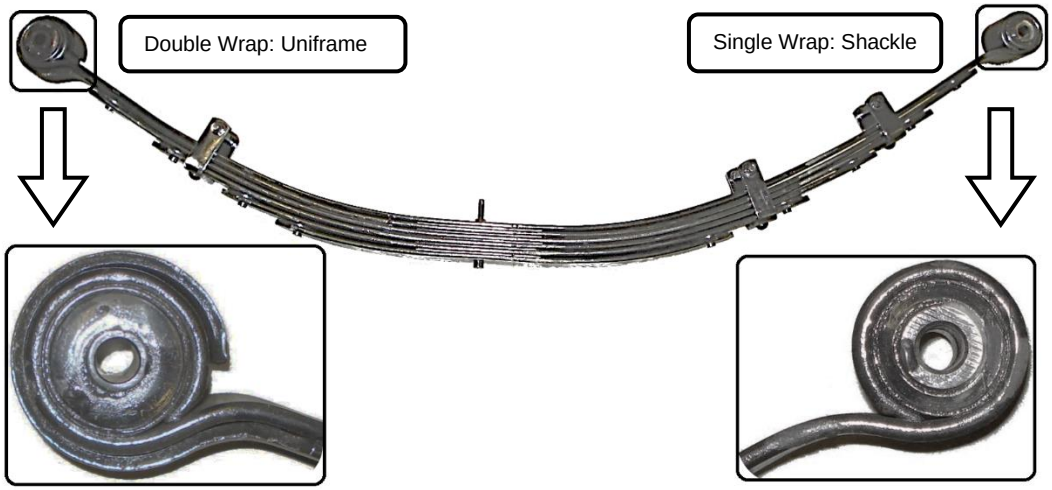

75. Install new U-Bolts. Do not tighten at this time.
76. Raise vehicle and reposition jack stands under the rear axle.
77. Ensure that the vehicle is safely supported.
78. Torque U-Bolts to 90 ft-lbs.
79. Torque leaf spring and shackle bolts to 120 ft-lbs.
80. Install rear brake line.
81. Grease lower shock studs, install spacer from **HK #274** on lower rear shock stud then install rear shocks with shock shafts facing up. Torque lower bolts to 46 ft-lbs.
82. Apply anti-seize to upper bolts and install rear shocks using original hardware. Torque upper shock barpin bolts to 17 ft-lbs.
83. Bleed the front and rear brakes. See service manual for brake bleeding procedure.

Final Torque:

84. With the weight of the vehicle on the springs, torque any loose bolts to spec.
85. Torque all front lower control arm nuts to 135-ft-lbs.
86. Torque upper control arm nut at axle to 60-ft-lbs.
87. Ensure axle is centered. Orient track bar clamps to not interfere with any other components. Tighten track bar clamps to 60 ft-lbs.
88. Torque lower control arm clamping bolts to **140 in-lb**. Be sure to go back and forth between both bolts several times to ensure even clamping.
89. Torque any remaining loose bolts to spec.
90. Install tires and place the vehicle on the ground.
91. Torque lug nuts to spec. (85-115 ft-lbs. depending on your wheels)

Adjustments and Final Inspection:

92. Check all components for clearance for suspension to fully cycle up and down and wheels to turn lock to lock. Pay special attention to brake lines, axle vent hoses, and ABS wires. Reposition as needed by bending the brackets, relocating, or extending hoses and wiring.

* A professional front end alignment is required after installation. We recommend the following alignment settings:

Caster: +3.75 to +5.75 (+4.5 is preferred if possible)

Toe-in: +1/16" to +1/8"

89. Check caster angle. Using a laser level or string level, set the front axle level to the rear axle (left side and right). Bounce the Jeep up and down to ensure the suspension is in resting position (at exact ride height). Place the angle finder under the axle "C" (or on top of the upper ball joint). Ensure the angle finder is parallel to the Jeep front to rear. This is your caster angle.
90. Recheck all fasteners and torque any remaining loose nuts or bolts to spec.

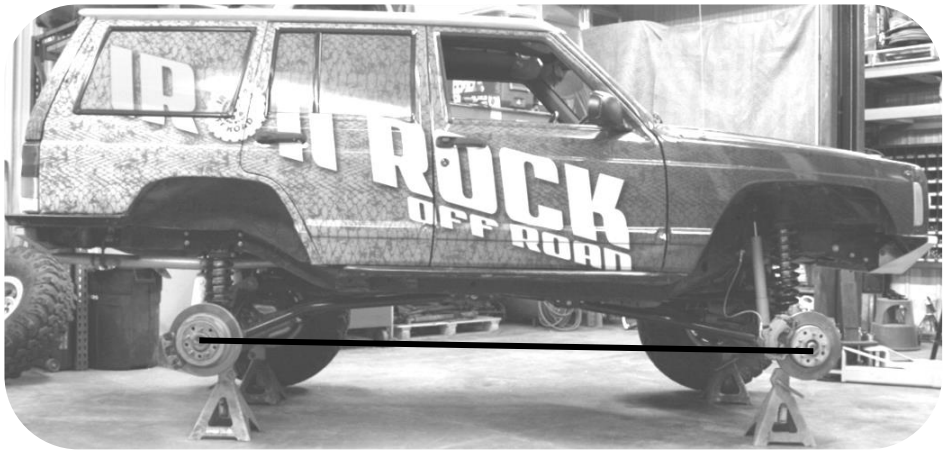

Final Safety Warning:

* Re-torque all fasteners after 100 miles, and frequently inspect all safety critical suspension components. It is the responsibility of the installer to ensure all fasteners are properly tightened after installation and to ensure the owner knows his/her ongoing responsibility. It is the responsibility of the owner of the vehicle to be sure all safety critical components are inspected frequently, especially after off road or other demanding use.

IRON ROCK OFF ROAD

ROCK-LINK

Fits All Iron Rock Off Road Long Arm Systems, WJ A-Arms, and Build Your Own Flex End Assemblies.

Before you begin:

- Read and understand installation instructions.
- Contact Iron Rock Off Road with any questions before, during, or after installation.
- ***Ensure that all parts are present and in good condition per attached shipping checklist!***
- Have these tools handy:
- 5/32" allen head socket
- 3/8" open end wrench
- Inch-lb. torque wrench
- Multipurpose grease/grease gun

Parts Checklist:

- ❑ Outer housing, weld on (may already be attached to your existing control arm)

#127 - 2-5/8" IRO Flex End (6 bolt)

- ❑ 2-5/8" flex end race 91118 (2)
- ❑ Thrust washer 91119 (2)
- ❑ 2-5/8" flex end ball 91117 (1)
- ❑ #10-32 nylock nut (7)
- ❑ #10-32 x 1-3/4" socket head cap screw (6)
- ❑ 90° ¼"-28 grease zerk fitting (1)

Figure 1

Assembly:

1. Insert two #10-32 socket head cap screws into one thrust washer and one plastic race. Spherical bore of race facing away from thrust washer. (Figure 1)
2. Install this small assembly into the flex end housing. The races are a light press fit, use a wide punch and hammer to assist you if needed.
3. Apply a thin coating of multi-purpose grease to the mating surfaces of the ball and both races.
4. Place the ball in the race (inside the flex end). The ball should perfectly fit the contour of the race. (Figure 2)
5. Insert the other race onto the ball so that the spherical bore is contacting the ball. Once again, the races are a light press fit, use a hammer and wide punch if needed. (The two screws should be through one washer and both races at this point)
6. Insert the second thrust washer on top of the flex end housing, sliding the bolts through the holes. (Figure 3)
7. Start nylock nuts on the two bolts that are in the flex end assembly. Hold the nut and turn the bolt.
8. Insert the remaining four cap screws through the remaining holes and install nuts. (Figure 4)
9. Snug up all of the bolts fairly tight.
10. Torque bolts evenly, starting at one bolt and continuing using a crisscross pattern. Torque all six bolts to 70 in-lbs., then to 85 in-lbs.
11. Install 90°grease zerk fitting so that it is easily accessed in the vehicle.
12. Grease flex end until grease comes out of the races around the ball.
13. Re-torque bolts to 85 in-lbs. after 5 minutes.

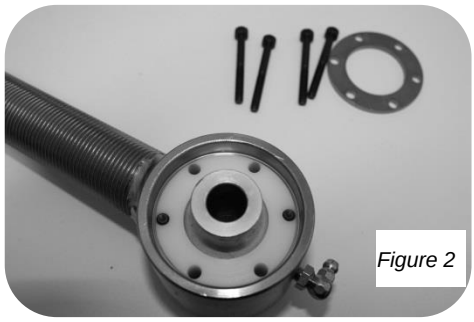

Figure 2

**Reference Only* Complete joint shown fully assembled without housing*

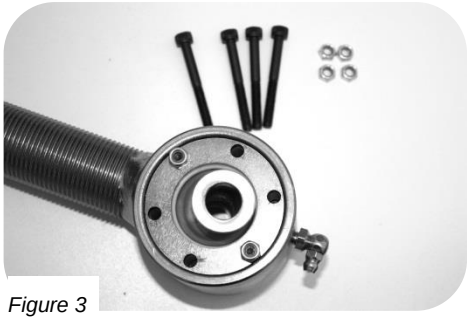

Figure 3

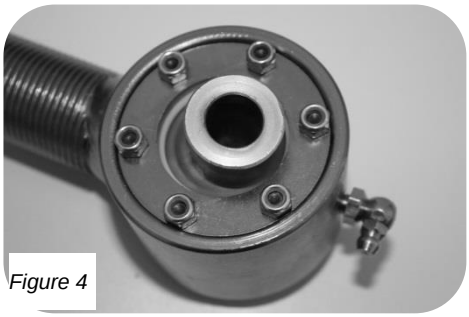

Figure 4

Before you begin:

- Read and understand installation instructions.
- Contact Iron Rock Off Road with any questions before, during, or after installation.
- ***Ensure that all parts are present and in good condition per attached shipping checklist!***
- Have these tools handy:
  - 9/64" Allen head socket
  - 3/8" open end wrench
  - Inch-lb. torque wrench
  - Multipurpose grease/grease gun

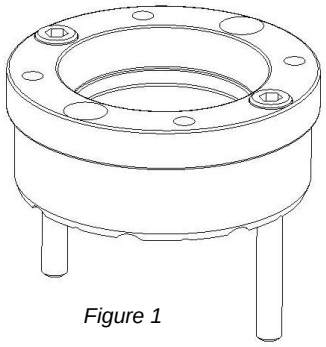

Figure 1

Parts Checklist:

- ❑ Outer housing, weld on (may already be attached to your existing control arm)

#168 - 2-3/8" IRO Flex End (8 bolt)

- ❑ Inner race 91139 (2)
- ❑ Thrust washer 91138 (2)
- ❑ Ball 91140 (1)
- ❑ #8-32 x 1-1/2" socket head cap screw (8)
- ❑ ¼"-28 90° grease zerk fitting (1)
- ❑ ¼-28 straight grease zerk fitting (1)

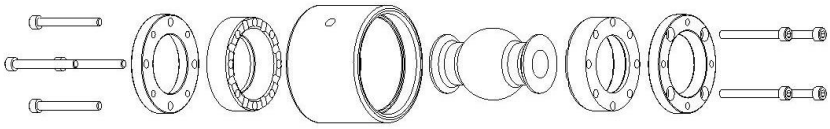

Assembly:

1. Insert two #8-32 socket head cap screws into one thrust washer and one plastic race. Spherical bore of race facing away from thrust washer. (Figure 1)
2. Install this small assembly into the flex end housing. The races are a light press fit, use a wide punch and hammer to assist you if needed.
3. Apply a thin coating of multi-purpose grease to the mating surfaces of the ball and both races.
4. Place the ball in the race (inside the flex end). The ball should perfectly fit the contour of the race.
5. Insert the other race onto the ball so that the spherical bore is contacting the ball. Once again, the races are a light press fit, use a hammer and wide punch if needed. (The two screws should be through one washer and both races at this point)
6. Insert the second thrust washer on top of the flex end housing, aligning the bolts with the threaded holes.
7. Start threading the two bolts into the threaded holes of the thrust washer. Do not fully tighten at this time.
8. Insert the remaining cap screws through the remaining holes and get them started in the threaded washer.
9. Snug up all of the bolts fairly tight. Go back and forth, rechecking each bolt several times to ensure even clamping
10. Torque bolts evenly starting at one bolt using a crisscross pattern, like torqueing lug nuts. Torque all eight bolts to 50 in-lbs., then to 55 in-lbs.
11. Install 90°grease zerk fitting so that it is easily accessed in the vehicle.
12. Use a grease gun to grease the flex end through the zerk fitting. This will be difficult due to the tight tolerances in the flex joint assembly.
13. Re-torque bolts to 55 in-lbs.

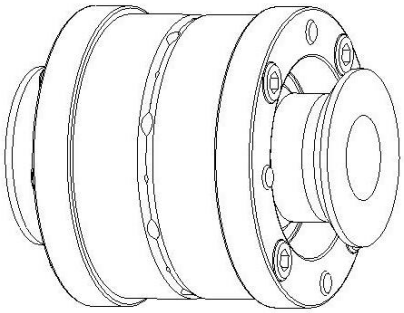

**Reference Only* Complete joint shown fully assembled without housing*

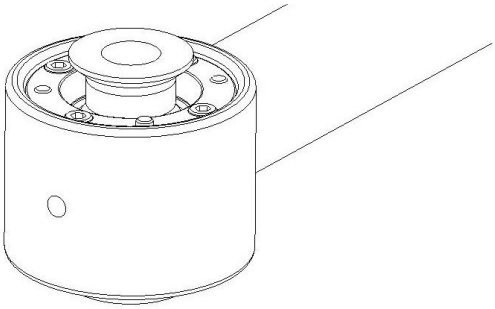

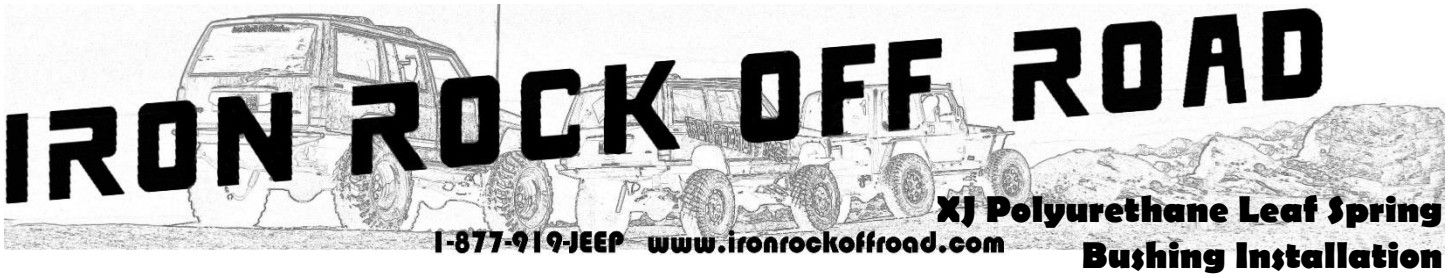

Shipping Checklist:
Hardware Kit # 72

- ❑ Instructions
- ❑ Main Eye Leaf Spring Bushings (4) – M20774
- ❑ Leaf Spring Shackle Bushings (4) – M20775
- ❑ Main Eye Bushing Sleeve (2)
- ❑ Shackle Bushing Sleeve (2)

Installation Instructions:
Before you begin:

- Read and understand installation instructions.
- Contact Iron Rock Off Road with any questions before, during, or after installation.
- **Ensure that all parts are present and in good condition per attached shipping checklist.**
- You will need basic wheel bearing multi-purpose grease and a brush.

Bushing Installation:

1. Locate main eye bushings (M20774) and main eye bushing sleeves (M20775) and separate from other parts.
2. Liberally apply grease to the inside of the leaf spring main eye bushing opening.
3. Apply grease to bushing halves on mating surface and sleeves.
4. Press one bushing half into main eye bushing opening.
5. Press the other bushing half into the main eye bushing opening on the opposite side of the first half.
6. Apply grease to the bushing sleeve and slide it into the two bushing halves.
7. Mimic the main eye installation for the shackle bushings using shortest sleeves and thinner flange bushing halves.